Current Mode Control for LLC Series Resonant Dc-to-Dc Converters

Jinhaeng Jang*, Minjae Joung, Seokjae Choi, Youngho Choi, and Byungcho Choi
School of Electrical Engineering and Computer Science
Kyungpook National University, Taegu, Korea
* Educational leave from LG Electronics, Pyeongtaek, Korea
jinhaeng.jang@lge.com

***Abstract*—Conventional voltage mode control only offers limited performance for LLC series resonant dc-to-dc converters experiencing wide variations in operating conditions. This paper presents current mode control which could consistently provide good closed-loop performance for LLC resonant converters for the entire operational range. The proposed control scheme employs an additional feedback from the current of the resonant tank network to overcome the limitation of the existing voltage mode control. The superiority of the proposed current mode control over the conventional voltage mode control is verified using an experimental 150 W LLC series resonant dc-to-dc converter.**

I. INTRODUCTION

LLC series resonant converters [1-4] are widely adapted to consumer or industrial electronics due to their inherent advantages over contending topologies. In these applications, LLC resonant converters often confront wide variations in operating conditions. For example, LLC dc-to-dc converters employed as an off-line power supply receive the input from a power factor corrected rectifier whose output voltage could vary substantially due to sagging and swelling in the line voltage.

It is well known [1-3] that the small-signal dynamics of LLC resonant converters drift substantially as the operating condition is altered. For this case, the control scheme should be designed in consideration of the potential changes in small-signal dynamics. Ideally, the control design should consistently offer the desired dynamic performance for the entire operational range, regardless of any changes in operating conditions.

LLC series resonant dc-to-dc converters are traditionally controlled by voltage mode control in which the output voltage alone is employed as the feedback signal. The performance of voltage mode control is directly influenced by potential changes in power stage dynamics. Accordingly, it is quite possible that a control design optimized at one particular operating point becomes less appropriate when the operating condition is varied.

This paper proposes current mode control for LLC series resonant converters, which offers good closed-loop performance for the entire operational region, thereby resolving the problem of the conventional voltage mode control. The proposed control scheme employs an additional current feedback from the resonant tank network on top of the output voltage feedback. The purpose of the tank current feedback is to construct a composite feedback signal which is not influenced by potential changes in power stage dynamics. Accordingly, the proposed current mode control could retain desired closed-loop performance for the entire operational range.

This research was supported by Basic Science Research Program through the National Research Foundation of Korea (NRF) funded by the Ministry of Education, Science and Technology (2009-0075088).

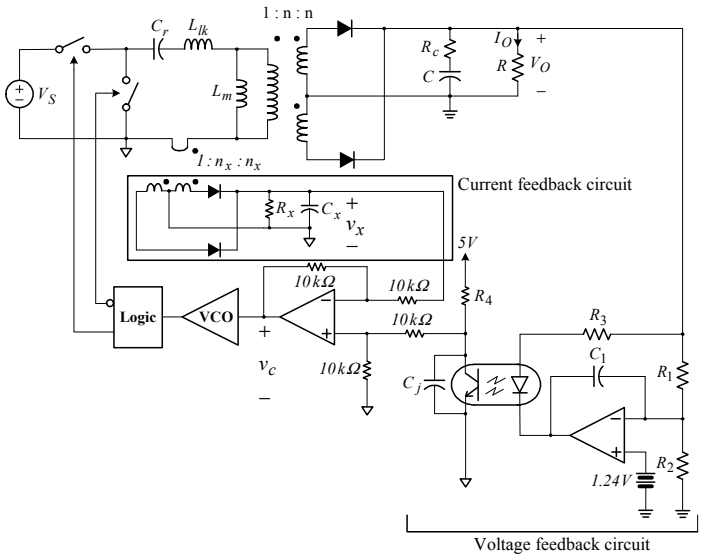

Fig. 1 Experimental LLC converter with proposed current mode control. $V_S = 340 \sim 390V$, $V_O = 24V$, $I_O = 1 \sim 6A$, $C_r = 47nF$, $L_{lk} = 160\,\mu H$, $L_m = 1.24\,mH$, $n = 0.14$, $C = 2\,mF$, $R_c = 5m\Omega$, $n_x = 100$, $R_x = 50\Omega$, $C_x = 0.1\mu F$, $R_1 = 2.2k\Omega$, $R_2 = 120\Omega$, $R_3 = 1.1k\Omega$, $R_4 = 13k\Omega$, $C_1 = 0.22\mu F$, $C_j = 3nF$ (optocoupler junction capacitor).

First, the small-signal dynamics of LLC converters are presented to address the problem of the conventional voltage mode control. Second, the concept and principle of the proposed current mode control are illustrated. Then, design considerations for the proposed current mode control are discussed and design procedures are formulated. Finally, the performance of the proposed current mode control is demonstrated in comparison with that of the conventional voltage mode control.

II. SMALL-SIGNAL DYNAMICS AND LIMITATION OF VOLTAGE MODE CONTROL

Fig. 1 shows the circuit diagram of the experimental LLC converter employing the proposed current mode control. As a typical off-line power supply, the input voltage of the

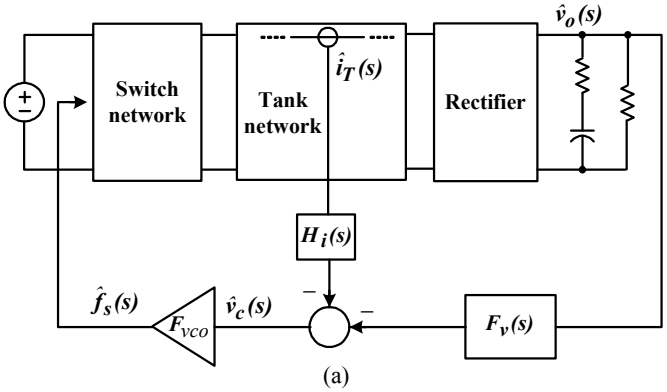

(a)

Table I: Expressions for gain blocks

F_{vco}	$F_{vco} = 6.9\times10^4$ [Hz/V]
$H_i(s)$	$H_i(s) = \frac{R_x}{n_x}\frac{1}{1+sC_xR_x} = \frac{0.5}{1+s/2.0\times10^5}$
$F_v(s)$	$F_v(s) = \frac{CTR\cdot R_4}{sC_1R_1R_3}\frac{(1+sC_1R_1)}{(1+sC_jR_4)} = \frac{2.0\times10^4(1+s/2.0\times10^3)}{s(1+s/2.5\times10^4)}$ CTR=0.84 : Current transfer ratio of optocoupler

(b)

Fig. 2 Functional block diagram of current-mode controlled LLC converter and expressions for gain blocks. (a) Functional block diagram. F_{vco} is VCO gain, $H_i(s)$ is the transfer function of the current feedback circuit, and $F_v(s)$ is the feedback compensation of the voltage feedback circuit. (b) Expressions for gain blocks.

converter is varied between $340\,V < V_S < 390\,V$, while the load current can also be changed between $1\,A < I_O < 6\,A$. In addition to an optocoupler-isolated voltage feedback circuit, a current feedback circuit is configured using a center-tapped current transformer and rectifier circuit, in order to exploit the tank current as a part of the feedback signal. Fig. 2(a) shows a functional block diagram of the current-mode controlled LLC converter. Table I in Fig. 2(b) shows the expressions and parameters of the gain blocks defined in Fig. 2(a).

A. Control-to-Output Transfer Function

The sensitivity of the power stage dynamics can readily be illustrated using the control-to-output transfer function. For this purpose, Fig. 3 shows the control-to-output transfer function of the prototype LLC converter, evaluated without employing the proposed resonant tank current feedback. The transfer function is expressed as

$$G_{vco}(s) \equiv \left.\frac{\hat{v}_o(s)}{\hat{v}_c(s)}\right|_{H_i(s)=0} = F_{vco}\frac{\hat{v}_o(s)}{\hat{f}_s(s)} \qquad (1)$$

where F_{vco} is the VCO gain and $\hat{v}_o(s)/\hat{f}_s(s)$ is the frequency-to-output voltage transfer function. The control-to-output transfer functions $G_{vco}(s)$, along with all the forthcoming power stage and closed-loop transfer functions, are evaluated at two different operating points: Point A with $V_S = 340\,V / I_O = 6\,A$ and Point B with $V_S = 390\,V / I_O = 6A$. In the transfer function analysis, the time-domain simulation method [1-3] is used for theoretical predictions. Theoretical predictions are then presented in parallel with experimental measurements. The PSIM model [6] used for the time-domain simulation method is given in Appendix.

As shown in Fig. 3, the control-to-output transfer function $G_{vco}(s)$ shows substantial differences at Point A and Point B. At Point B, $G_{vco}(s)$ reveals the first-order system characteristics up to mid-band frequencies. In contrast, the transfer function resembles the second-order system characteristics at Point A. In fact, it was shown in [2,3] that the characteristics of Point B are the typical power stage dynamics when the operating point is located at *the region of above resonance* [2]. On the other hand, the characteristics of Point A are the indication that the operating point in *the region of below resonance* [2]. Furthermore, the converter experiences a gradual transition from the dynamics of Point B to those of Point A, as the operating point moves from the above resonance to below resonance. Detailed discussions about the small-signal dynamics are given in [1-3].

B. Limitation of Conventional Voltage Mode Control

In conventional voltage mode control, the output voltage alone is employed as the feedback signal. Accordingly, $G_{vco}(s)$ shown in Fig. 3 is used as the basis for the voltage feedback compensation design. For this case, the loop gain

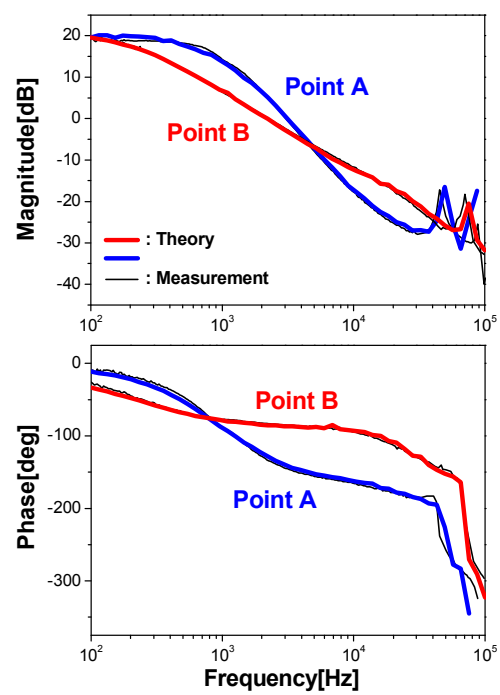

Fig. 3 Control-to-output transfer function $G_{vco}(s)$ at Point A and Point B.

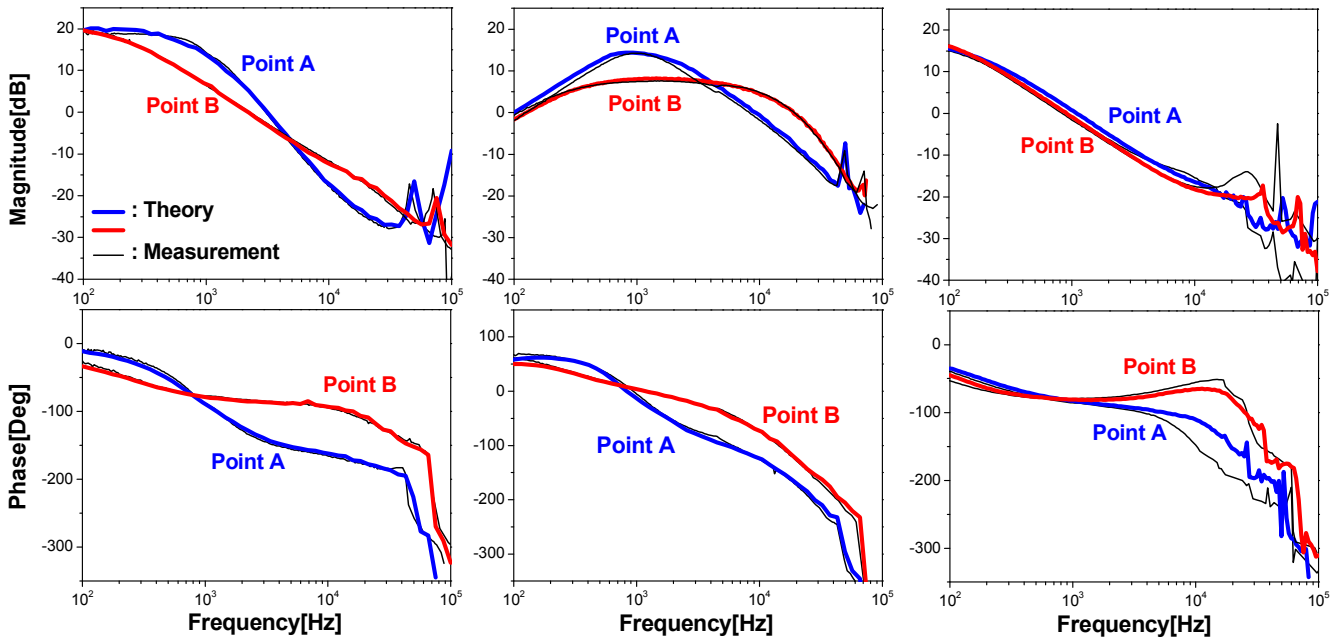

Fig. 4 Power stage transfer functions of experimental LLC converter. (a) Numerator of Equation (3). (b) Denominator of Equation (3). (c) Control-to-output transfer function $G_{vci}(s)$ with current mode control.

and other closed-loop transfer functions will be directly affected by the changes in $G_{vco}(s)$.

One practical design strategy at the presence of wide variations in $G_{vco}(s)$ is to design the voltage compensation for the worst-case operating condition [1]. Point A exhibits the second-order behavior with unfavorable phase characteristics and thus can be considered as the worst-case operating condition. As demonstrated in [1], a three-pole two-zero compensation can be employed to achieve stable operation with good dynamic performance at Point A. However, the resulting design would become overly conservative and only offers limited performance at other operating points than Point A.

III. Principle of Current Mode Control

The basic concept of current mode control is to employ an additional feedback from the power stage to construct the composite feedback signal that would not affected by any changes in power stage dynamics. In the proposed current mode control, the tank current feedback signal is added to the optocoupler-isolated voltage feedback signal to generate the composite feedback signal. The control-to-output transfer function, evaluated with the resonat tank current feedback, is determined from Fig. 2(a)

$$G_{vci}(s) \equiv \left.\frac{\hat{v}_o(s)}{\hat{v}_c(s)}\right|_{H_i(s)\neq 0} = \frac{F_{vco}\dfrac{\hat{v}_o(s)}{\hat{f}_s(s)}}{1+F_{vco}\dfrac{\hat{i}_T(s)}{\hat{f}_s(s)}H_i(s)} = \frac{G_{vco}(s)}{1+F_{vco}\dfrac{\hat{i}_T(s)}{\hat{f}_s(s)}H_i(s)} \tag{2}$$

where $H_i(s)$ is the transfer function of the current feedback circuit and $\hat{i}_T(s)/\hat{f}_s(s)$ is the frequency-to-tank current transfer function. Equation (2) is approximated to

$$G_{vci}(s) \cong \frac{G_{vco}(s)}{F_{vco}\dfrac{\hat{i}_T(s)}{\hat{f}_s(s)}H_i(s)} \tag{3}$$

assuming the condition $F_{vco}\,|\hat{i}_T(j\omega)/\hat{f}_s(j\omega)|\,|H_i(j\omega)| \gg 1$, which is true over most frequency range of practical importance.

Fig. 4 shows the Bode plots of the transfer functions involved with Equation (3). Fig. 4(a) shows the numerator of (3), which corresponds to the control-to-output transfer function $G_{vco}(s)$ in case of the conventional voltage mode control. Fig. 4(b) shows the denominator of (3), which corresponds to the gain of the inner current loop created by the tank current feedback. While Fig. 4(b) also shows wide variations at the two different operating points, a close examination reveals that the transition pattern of Fig. 4(b) closely resembles the transition pattern of Fig. 4(a). This is because any drift in power stage dynamics will commonly propagate into both $\hat{v}_o(s)/\hat{f}_s(s)$ and $\hat{i}_T(s)/\hat{f}_s(s)$ and therefore will exert the same influence on the numerator and denominator of (3). Accordingly, the consequences of any changes in power stage dynamics will be cancelled in (3) and the control-to-output transfer function will remain mostly invariant. Fig. 4(c) shows the control-to-output transfer function at the two different operating points. The transfer function indeed shows consistent characteristics for wide frequency range. The benefit of the tank current feedback is clearly seen when Fig. 4(c) is compared with Fig. 4(a). Namely, the control-to-output transfer function remains

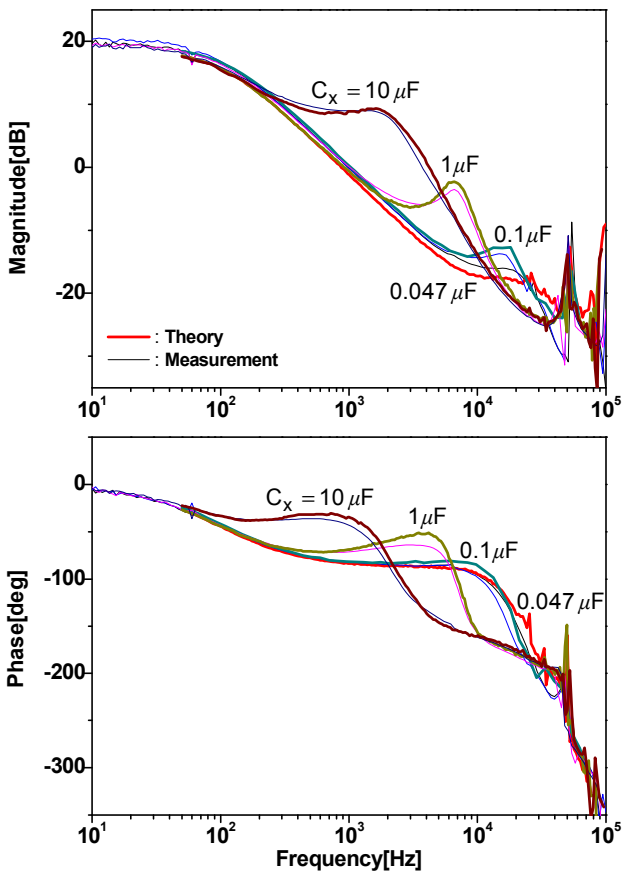

Fig. 5 Control-to-output transfer function with different filter capacitance

mostly unchanged for wide frequency range and the voltage feedback compensation thus can be designed for optimal performance for the entire operational range.

IV. Design of Current Mode Control

The implementation of the proposed current mode control requires the design of both current feedback circuit and voltage feedback compensation.

A. Current Feedbak Circuit Design

Due to the presence of the rectifier circuit, the current feedback circuit presents a first-order low pass filter transfer function

$$H_i(s) = \frac{H_i}{1 + \frac{s}{\omega_{pi}}} \tag{4}$$

with

$$H_i = \frac{R_x}{n_x} \tag{5}$$

and

$$\omega_{pi} = \frac{1}{C_x R_x} \tag{6}$$

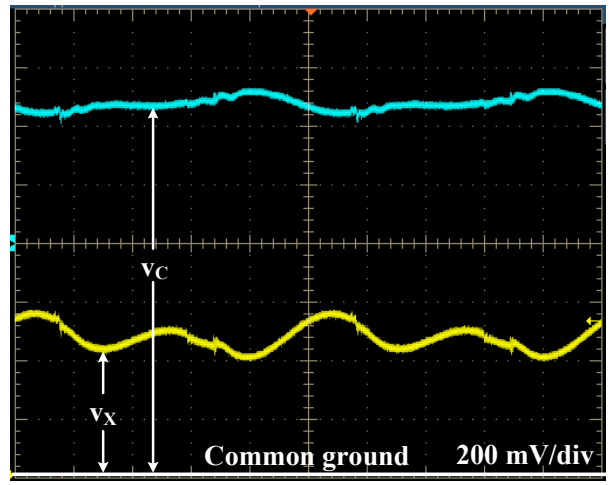

(a)

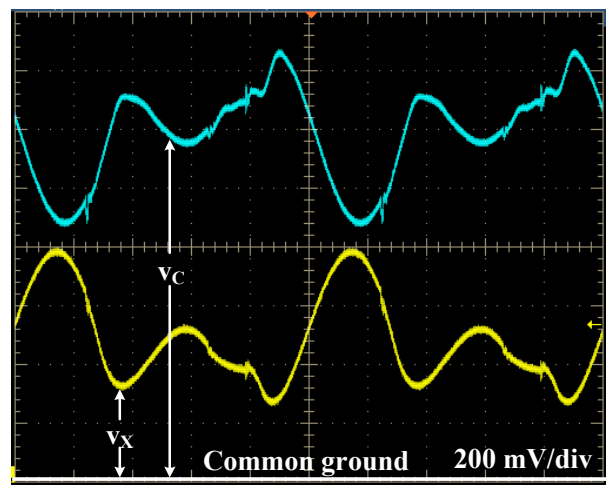

(b)

Fig. 6 Current feedback signal v_x and composite feedback signal v_c with $C_x = 0.1\mu F$ and $C_x = 0.047\mu F$. (a) $C_x = 0.1\mu F$. (b) $C_x = 0.047\mu F$.

where n_x is the turns ratio of current transformer, R_x is resistance, and C_x is the capacitance of the rectifier circuit. The dc gain H_i can be selected considering the magnitude of the tank current. For the prototype converter, the dc gain is set at $H_i = 0.5$ with $n_x = 100$ and $R_x = 50$.

The pole frequency ω_{pi} should be selected to obtain sufficient filtering, while not causing any detrimental effects to the control-to-output transfer function. Fig. 5 shows $G_{vci}(s)$ evaluated at Point A using different values for C_x with $R_x = 50$. The transfer function exhibits a resonant-type peaking whose frequency is inversely proportional to the capacitance of C_x . For larger capacitances, the peaking occurs at low frequencies, deteriorating the phase characteristics of the transfer function. On the other hand, small capacitances push the peaking towards higher frequencies and do not significantly change the control-to-output transfer function. It was found that $C_x = 0.1\mu F$ practically eliminates the peaking from the control bandwidth.

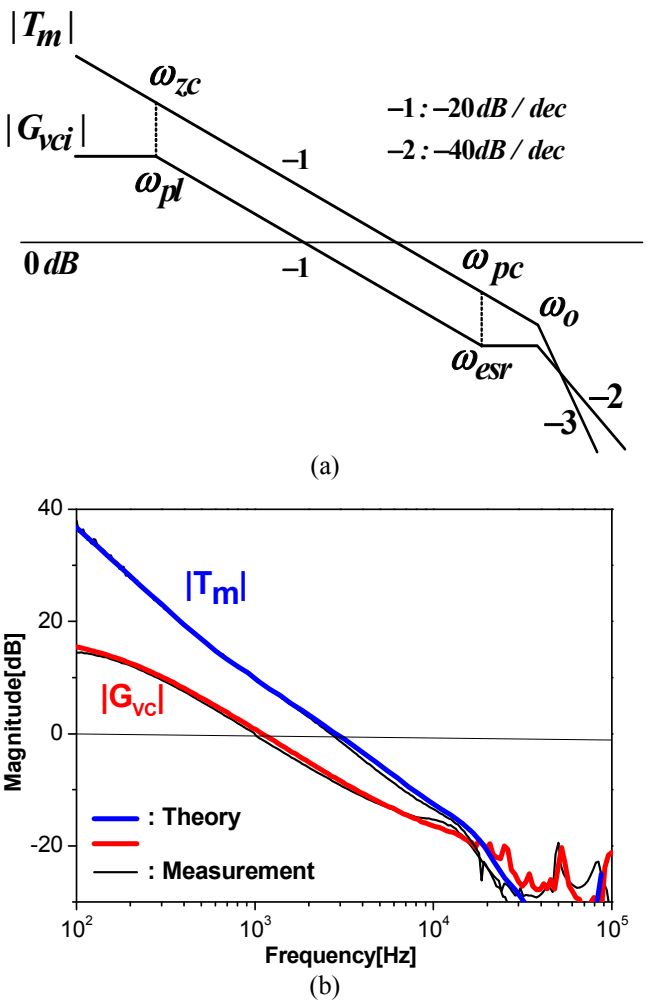

Fig. 7 Voltage feedback compensation design. (a) Design strategy. (b) Design verification.

Fig. 6 shows the tank current feedback signal, v_x in Fig. 1, and the composite feedback signal, v_c in Fig. 1, measured with $C_x = 0.1\mu F$ and $C_x = 0.047\mu F$ at the operating Point A. Fig. 6(a) shows the waveforms with $C_x = 0.1\mu F$. The tank current feedback signal contains a finite ripple component due to the nonideal filtering characteristics of the rectifier circuit. Furthermore, the ripple component shows cycle-by-cycle imbalance due to the dissymmetry in the inductive parameters of the center-tapped transformers used in the resonant tank circuit and current sensing circuit. Nonetheless, the composite feedback signal maintains a sufficient integrity due to a large dc offset contained in the voltage feedback signal.

Fig. 6(b) shows the waveforms with $C_x = 0.047\mu F$. With a smaller capacitance, both the ripple component and dissymmetry are increased, thus jeopardizing the proper operation of the controller. Based on this analysis, $C_x = 0.1\mu F$ is finally selected for the experimental LLC converter.

B. *Voltage Feedback Compensation Design*

In order to design the voltage feedback circuit, it might be necessary to find an exact expression for the control-to-output transfer function $G_{vci}(s)$, evaluated at the presence of the tank current feedback. However, this task will be overly challenging due to the complex power stage dynamics. As an alternative engineering practice, $G_{vci}(s)$ can be approximated as a third-order polynomial, based on the general profile of the Bode plots shown in Fig. 4(c) and Fig. 5

$$G_{vci}(s) \cong G_{vci} \frac{\left(1+\frac{s}{\omega_{esr}}\right)}{\left(1+\frac{s}{\omega_{pl}}\right)\left(1+\frac{s}{Q\omega_o}+\frac{s^2}{\omega_o^2}\right)} \tag{7}$$

The zero frequency $\omega_{esr} = 1/(CR_c)$ is determined by the esr and capacitance of the output filter capacitor. The pole frequency ω_{pl} usually appears at lower frequencies. As previously discussed, this low frequency pole emerges at a fixed frequency regardless of changes in operating conditions. From the Bode plots in Fig. 4(c) and Fig. 5, the location of this pole is approximated as $\omega_{pl} \cong 2\pi \cdot 330\ r/s$.

For the given the control-to-output transfer function structure, a two-pole one-zero compensation

$$F_v(s) = \frac{K_v\left(1+\frac{s}{\omega_{zc}}\right)}{s\left(1+\frac{s}{\omega_{pc}}\right)} \tag{8}$$

would provide desirable loop gain characteristics. Fig. 7(a) shows the construction of the asymptotic loop gain plot, $|T_m| = |G_{vci}F_v|$, with assumptions $\omega_{zc} = \omega_{pl}$ and $\omega_{pc} = \omega_{esr}$. The compensation zero is selected at $\omega_{zc} = 2\times10^3$ r/s while the compensation pole is set at $\omega_{pc} = 2.5\times10^4$ r/s. The integrator gain is designed as $K_v = 2.0\times10^4$ to place the loop gain crossover at higher frequencies while securing sufficient phase margin. Using the selected compensation parameters, the circuit components for the voltage feedback circuit are determined as shown in Fig. 1.

Fig. 7(b) shows the theoretical and experimental plots for $|G_{vci}|$ and $|T_m|$ of the prototype LLC converter operating at Point A. This figure validates the theoretical design procedure shown in Fig. 7(a).

V. PERFOMANCE OF CURRENT MODE CONTROL

The performance of the proposed current mode control is demonstrated in Fig. 8, in comparison with that of the conventional voltage mode control. The voltage mode control is duly designed using a three-pole two-zero compensation, based on the design procedures proposed in [1].

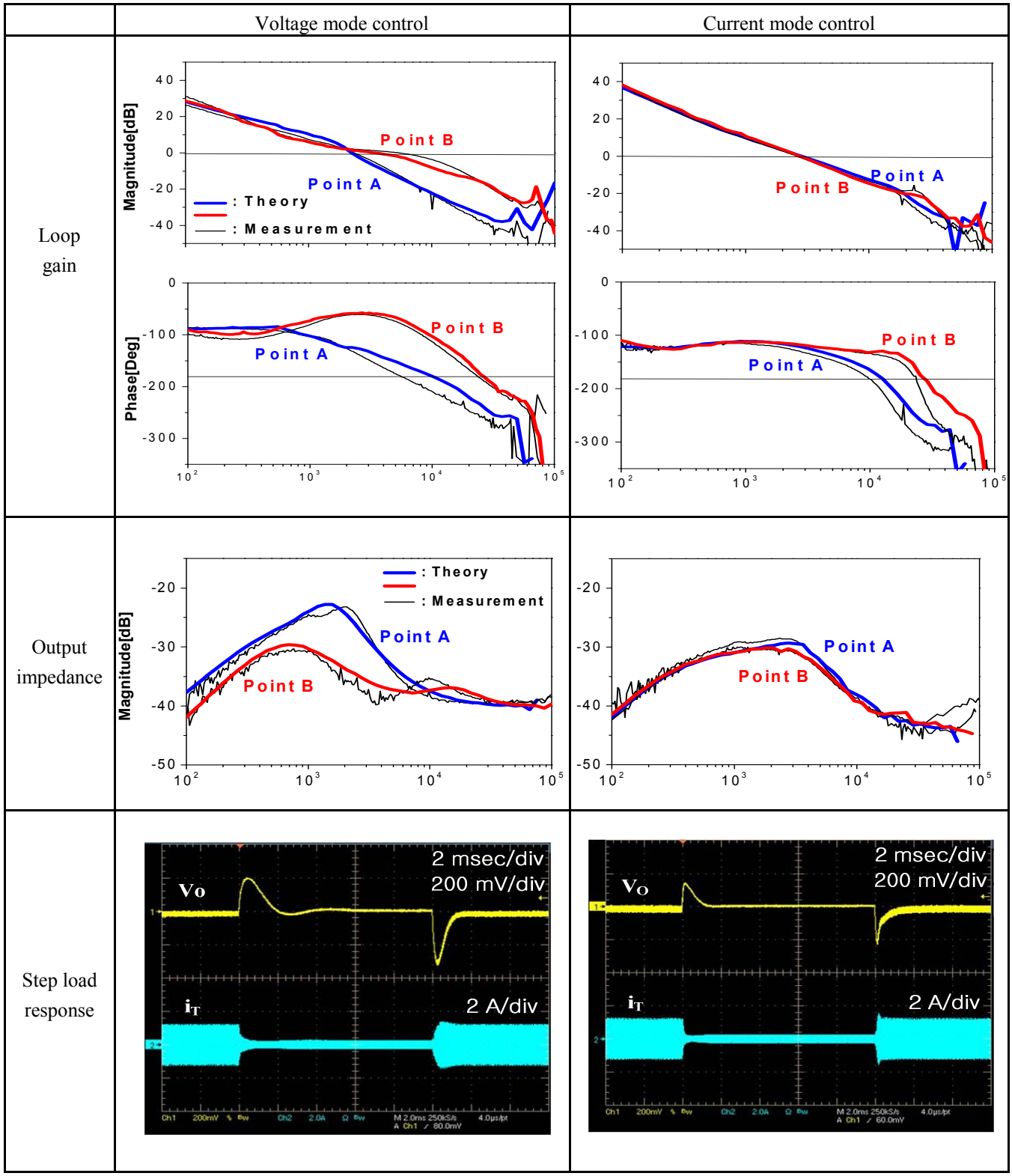

(a) (b)

Fig. 8 Performance of prototype LLC resonant converter with conventional voltage mode control and proposed current mode control. (a) Voltage mode control. (b) Current mode control.

A. Loop Gain and Output Impedance

As predicted in Section II-B, the loop gain of the voltage mode control is directly affected by the changes in the control-to-output transfer function and shows considerable variations at the two different operating points. In contrast, the current mode control maintains desirable loop gain characteristics with minimal changes in both the crossover frequency and phase margin. With the proposed current mode control design, the loop gain crosses the 0-dB line at $2\pi \cdot 3.5\times10^3$ r/s with 50° the phase margin at both Point A and B.

The output impedance of the voltage mode control also shows substantial drifts at Point A and B. In particular, the output impedance shows a peak value of -22dB at Point A. On the other hand, the current mode control shows near-uniform output impedance characteristics at both Point A and B. The peak value of the output impedance is limited by -30 dB.

B. Step Load Response

The transient waveforms due to the step load change at Point A ($I_O = 1\,A \Rightarrow 6\,A$), at which the voltage mode control reveals inferior loop gain and output impedance characteristics, are compared. As expected from the output impedance characteristics, the current mode control shows superior transient behavior and faster response in both the tank current i_T and output voltage v_O , thereby highlighting the merit of the proposed current mode control.

VI. CONCLUSIONS

This paper proposed a new current mode control scheme for LLC series resonant dc-to-dc converters. Using the additional feedback from the resonant tank current, the proposed control scheme effectively cancels the consequences of any possible changes in power stage dynamics, and therefore consistently provides desired closed-loop performance for the entire operational range.

While an LLC series resonant converter is considered in the paper, the proposed control scheme can be adapted to all types of resonant power converters as a viable substitute for the conventional voltage mode control that only provides limited performance.

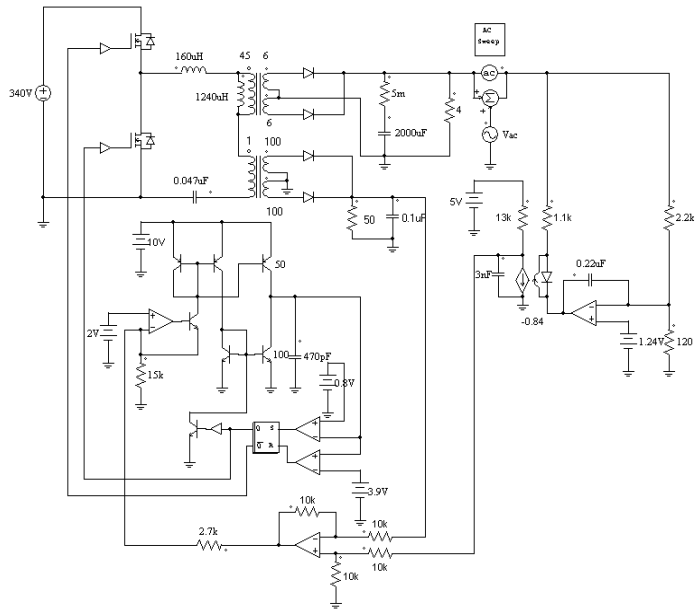

Fig. 9 PSIM model for prototype LLC resonant converter.

APPENDIX

Fig. 9 shows the circuit diagram of the PSIM model [6] used for time-domain simulations to extract the loop gain characteristics of the experimental LLC converter.

REFERENCES

[1] Jinhaeng Jang, Minjae Joung, Byungcho Choi, and Heung-guen Kim, "Dynamic analysis and control design of optocoupler-isolated LLC resonant converters with wide input and load variations,' Proc. ECCE 2009, Sep. 2009, San Jose, CA.

[2] Bo Yang, "Topology investigation for front end DC/DC Power Conversion for Distributed Power Systems," Dissertation, Virginia Polytechnic Institute and State University, 2003.

[3] Bo Yang and F.C. Lee, "Small-signal analysis for LLC resonant converter," CPES Seminar, 2003, S7.3 pp.144-149.

[4] S. De Simone, C. Adragna, C. Sppinni, and G. Gattavari, "Design-oriented steady state analysis of LLC resonant converters based on FHA," SPEEDAN 2006, pp. 200-207, May 2006.

[5] Weiping Zhang, Peng Mao, and Yuanchao Liu, "Small-signal modeling of series resonant converter," PEDS 2007, pp. 1466-1470.

[6] PSIM User's Guide, Powersim Inc, Version 7.0, Mar. 2006.